THE SIMPLE LIFE

YACHTIESGUIDE

STERN ANCHORING FOR SAFETY

After more than 6 years of experience, stern anchoring is the way to go.

I have anchored this way for six years in various parts of the Caribbean and on the East coast, and the boat sits very peacefully, with no wear on the anchor rode. During the last blow, boats went aground, dragged anchors, and one at the dock suffered a lot of damage, but my boat, anchored in the river on sand, just pivoted around to the gusts, and there was no dancing at anchor, which is the normal behavior of sailboats anchored off the bow. I went to check it out after the blow, and though I had left a forward hatch open a few inches (it was downwind and open at the fwd edge) and had not secured the companionway completely shut (for ventilation), there was no water in the boat and no damage to anything.

I rode out hurricane Floyd that way and same behavior. In fact I left a cup of tea sitting on the counter and didn't remember it as I sealed up the boat for Floyd. When I checked the boat out after Floyd, the almost full cup of tea was still sitting there - with four roaches in it! That was the last of the roaches - all died of sea sickness.

The idea is from a naval architect. Lots of nomographs to prove it is the best way to anchor in a restricted fetch location. The lines go to the sheet winches. The ball float is held about 6 feet off the back of the boat so that in conditions where the wind forces cancel out the current and the boat just drifts around, it prevents the boat from riding over the anchor rode and getting tangled up with the rudder. The black rubber tubes enclose a pvc pipe and prevents the pvc pipe from bending and shattering. The pipe and rubber are in compression when the loads on the rode are very light due to no wind, but when

Stern Anchoring
The bridle is anchored at the sheet winches with a bowline hitch. (The winches are attached to the deck with 5 5/15 bolts with an aluminum backing plate - not likely to give way.) The dacron bridle runs over a roller and under a bail to eliminate wear. The bridle ends at a 5/8 inch swivel to which is attached the ball.

the wind picks up everything is in tension and so there are no compressive loads on the PVC pipe which just hangs on the dacron bridle, and does nothing.

Cautions

•You must anchor in a location that has a short fetch - that is the distance from the boat to the farthest shore must be under a mile or so. Rivers are usually protected from high ocean swells. The problem is that in a bad blow the wave height is dependent upon the fetch. If the boat is moored open to the sea, the wave height can build and splash water into the cockpit which might fill and water get below, and possible sink the vessel. In a protected location, my experience has been that the waves even from a big storm reach no more than a couple of feet.

•The stern must have a counter, not an open stern, nor a flat stern (as on many aft cabin yachts), because it is important that the stern rise to the waves easily. Sterns with a counter have tremendous buoyancy, and so will lift to the waves and the cockpit will stay dry. This is another advantage of stern anchoring - you can check the lines without getting wet.

•Check the shackles every three months for corrosion. I once left the boat at anchor for over a year without checking. Two of the made in china West Marine shackles were so corroded away that they just fell apart when I finally hauled up

40 feet of 5/8 inch dacron line used for the bridle

There is no wear on the bridle, this is how it looked after five months of winter weather and a bad blow.

The black rubber wheel prevents the rubber hose from jamming into the bail.

Adiam condimentum Purus, in Proin in sapien. Fusce urna,neque lacus.

Sand is a plastic solid

It's is made of little particle of very hard "glass". Each particle touches other particles and when one moves many particles have to also move. Sand has 10 times the holding power of soft mud (which is just sticky stuff and this is how the anchor is held in place - it is sort of glued to the mud). Hard clay is excellent holding if you can ever get the anchor to bury. Even a small anchor can hold firmly in sand, but it is hard to bury in sand. On String of Pearls there is insufficient thrust from the 35 HP engine to bury even a 25 lb CQR anchor. My main anchors in sand are 35 lb CQRs and the most I can bury under power is one fluke. To bury the entire anchor requires a 50 kt gale. It required a 600 lb pull on the rode (measured) to bury both flukes.

Anchor davit design for stern anchoring

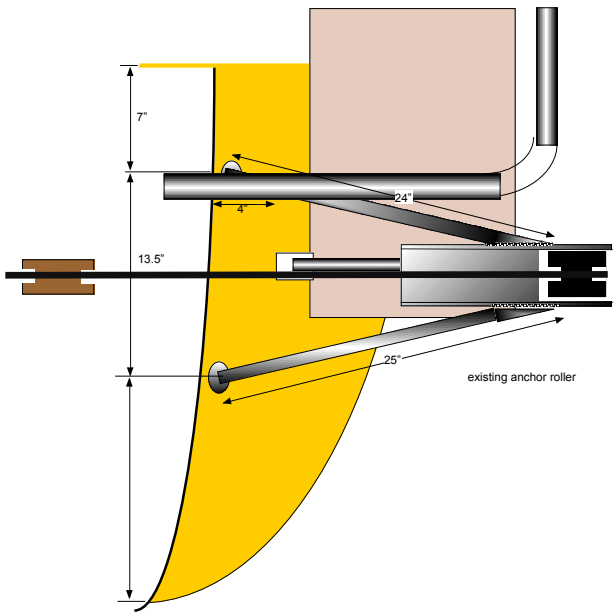

Material Selection
BC is in compression. A 1" dia SS tube with .16" wall thickness can support a compression load of 11,804 lbs F if both ends are pin jointed. More if one end is fixed (23,689 lbs F). So this tube will do the job. In tension SS tubes can stand higher stress, so a 1" dia ss tube will do also for AC.

NORMAL LOADS
Normal Anchor Forces on the glass fiber cause compression at B, tension and shear at A. Shear force at A is 433 lbs, Tension is 750 lbs. Tension causes a small amount of flexing of the panel. Flexural Strength is at least 30,000 psi for Woven Roving laminate. So any flexing is purely an aesthetic consideration. Impact strength is 150% of mild steel. There is no balsa core in the aft panel.
Woven roving has a compressive strength of 17,000 - 22,000 psi.
Shear strength for woven roving is 8 - 11,000 psi // to fibres and 13-15,000 psi perpendicular to fibre
If we use 1/4" ss bolt the shear force will be 750/.25 psi = 3000 psi, this is less than 40% of shear strength of glass. But better to share the load over multiple bolts, say 4 as for the Monitor windvane. OR add a hardwood backing plate that is epoxied to the glass to form a solid mass. The additional thickness reduces the psi.
Note: A 1/4" bolt has a breaking strength of 2000 lbs.

ACCIDENTAL LOADS - striking an object
But let's suppose that a firm object such as a jetty wall hits the anchor davit. We want the davit to crush before the glass is damaged.
The probability that the force would be along the long axis of the davit is small. Most likely the force would be at an angle, so we want the tube to bend before the glassfibre is sheared.
We could put a cut in the tube (as for the Monitor windvane rudder), to allow it to break away.

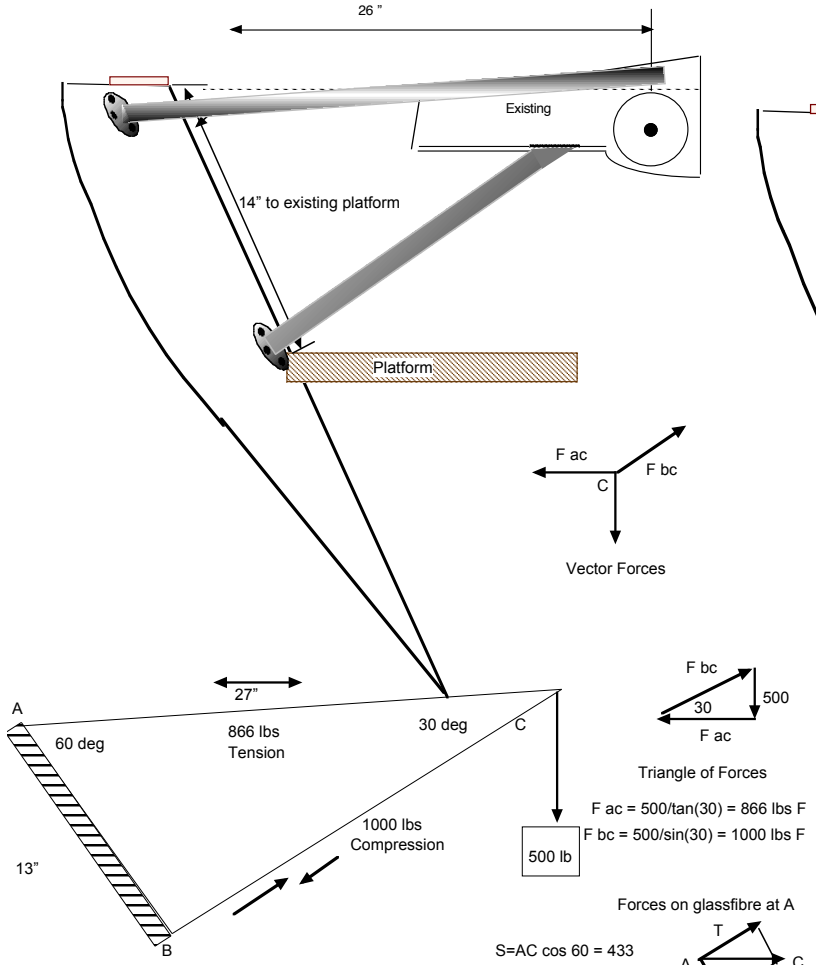

Static Loads with 500 lbs of Anchor/chain
(normal load in 30 feet depth and 35lb CQR is 80 lbs)

String of Pearls
Aft Anchor Davit: July 25 2001
Scale 1" = 3"

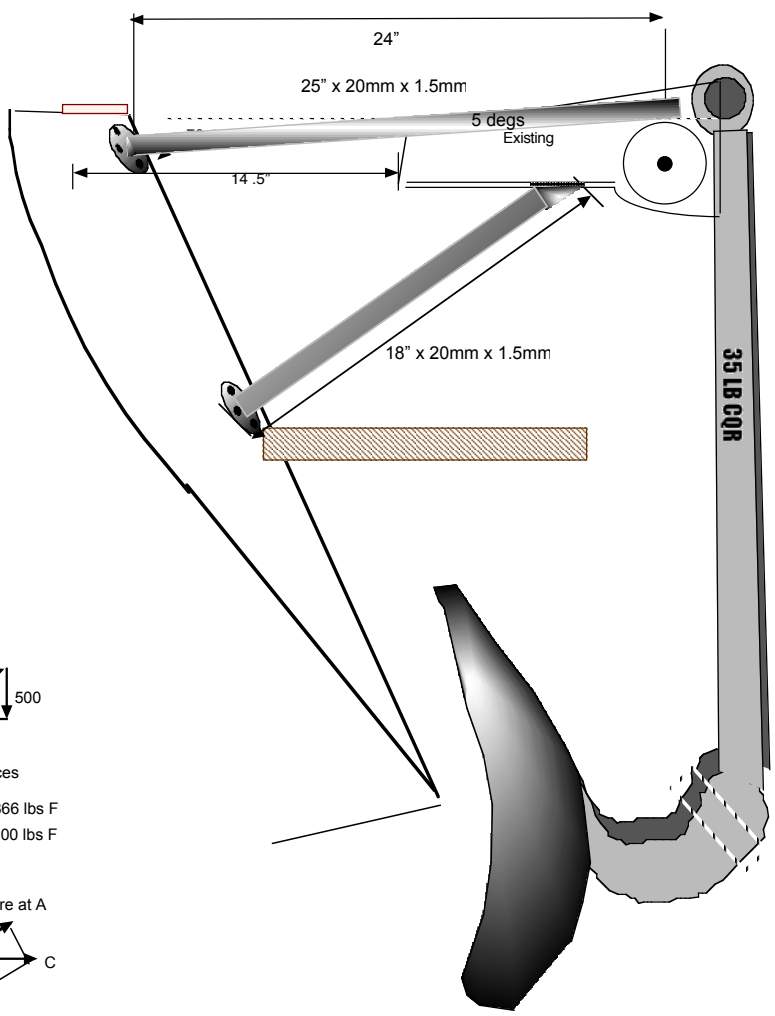

String of Pearls
Aft Anchor Davit: July 25 2001
Scale 1" = 5"

the anchor rode - yep the boat had drifted away, luckily no damage done.

Anchor Rode

In sand anchoring with a CQR the rode must have a 10:1 scope. i.e. The length of the rode from the anchor to the stern deck level must be ten times the water depth at HW + the freeboard at the Stern. I anchor where the LLW is 12 feet and HW is 18 feet. With 2 feet of freeboard that makes 20 feet of "drop" to the sea bed at HW. With a 10:1 ratio I need 200 feet of combined 7/16 chain and 5/8 inch nylon rode. Short scopes are no good for storm anchoring.

The weakest link

To support a 2000 lb pull on each anchor I use a 7/16 inch HT chain and 5/8 inch nylon rode. The shackles are 7/16 inch. The swivels 5/8 inch. All these items are rated at 2000 lbs working strain (WS). If I used a 3/8 inch shackle this would become the weak link at around 1200 lbs WS.

A long nylon rode

When you use a nylon rode, the stretch is a function of diameter and length. The heavier the rode, the longer the length you need to give the rode an elastic property. This stretching is what prevents the boat from snatching at the anchor and over stressing the fittings. A 5/8 inch nylon rode needs 150 feet to give it sufficient elasticity.

Chains

Only the Navy can get away with an all chain rode. Chain gives elasticity as long as you are anchored in water over 300 feet deep in a storm. Shallow water chain anchoring jerks the rode to death in only a short time.

Adiam condimentum Purus, in Proin in sapien. Fusce urna,neque lacus.

Types of Anchor

I use CQRs for serious storm anchoring in sand. The windage on my boat requires a holding force of 4000 lbs in a force 4 hurricane (140 kts). Two 35 lb CQRs can provide this holding power if they are helping each other and they are buried four feet down. Only a hurricane force wind can bury them this deep. You would need to put a pull on the rode of 4000 lbs to bury them to a depth that would sustain a pull of 4000 lbs - only a tug boat could do this. So what happens is that you dig them in so that the anchor has a good grip on the bottom, then wait for the wind to drive it in deeper. If you are stern anchoring the pull by the wind will be directly away from the anchors - a straight line pull. But if you are bow anchored the boat will yaw and will disturb the anchors, perhaps even pull them loose before they have a chance to bury.

So they key is to use an anchor type that will bury quickly as the pull comes on the rode. i.e. a "burying type" anchor like the CQR.

Screw anchors

A ten foot screw anchor buried completely can support pulls of several thousand pounds. But it must not be jerked by the rode, or it will work its way free. The screw anchor requires a steady pull along the long axis (i.e the screw should be aligned with the angle of the rode as much as possible) . The rode must also stretch and absorb the loads as the boat rises to the waves. Anchoring off the stern helps because the movement at the stern is less than at the bow. nevertheless if the wave height from crest to valley is, say, five feet, and the rode is taught due to the wind pressure, then the rode must stretch several feet to allow the boat to rise with the wave (see page 7 for details).

Anchoring in soft mud

Don't do it unless for a short stop and you remain on board or can monitor the boat from shore. You might get away with this if you use a Fortress mud anchor (FX37), and can bury it using the engine. The current must not be running at the time or the anchor will float above the sea bed.

Chain to nylon ratio

Use chain at the anchor end if the bottom would otherwise chafe the nylon rode. Chain may help to keep a lightweight anchor on the bottom as it begins to bury. It doesn't improve holding power, except on short scopes which we don't advise anyway. The chain adds to the weight of the anchor. Better to use a heavier anchor and no chain over smooth sea bed.

Swivels

Big - 5/8 inch diameter bolt minimum.

Chains

Only the Navy can get away with an all chain rode. Chain gives elasticity as long as you are anchored in water over 300 feet deep in a storm. Shallow water chain anchoring jerks the rode to death in only a short time.

Adiam condimentum Purus, in Proin in sapien. Fusce urna,neque lacus.

Types of Anchor

I use CQRs for serious storm anchoring in sand. The windage on my boat requires a holding force of 4000 lbs in a force 4 hurricane (140 kts). Two 35 lb CQRs can provide this holding power if they are helping each other and they are buried four feet down. Only a hurricane force wind can bury them this deep. You would need to put a pull on the rode of 4000 lbs to bury them to a depth that would sustain a pull of 4000 lbs - only a tug boat could do this. So what happens is that you dig them in so that the anchor has a good grip on the bottom, then wait for the wind to drive it in deeper. If you are stern anchoring the pull by the wind will be directly away from the anchors - a straight line pull. But if you are bow anchored the boat will yaw and will disturb the anchors, perhaps even pull them loose before they have a chance to bury.

So they key is to use an anchor type that will bury quickly as the pull comes on the rode. i.e. a "burying type" anchor like the CQR.

Screw anchors for storm mooring

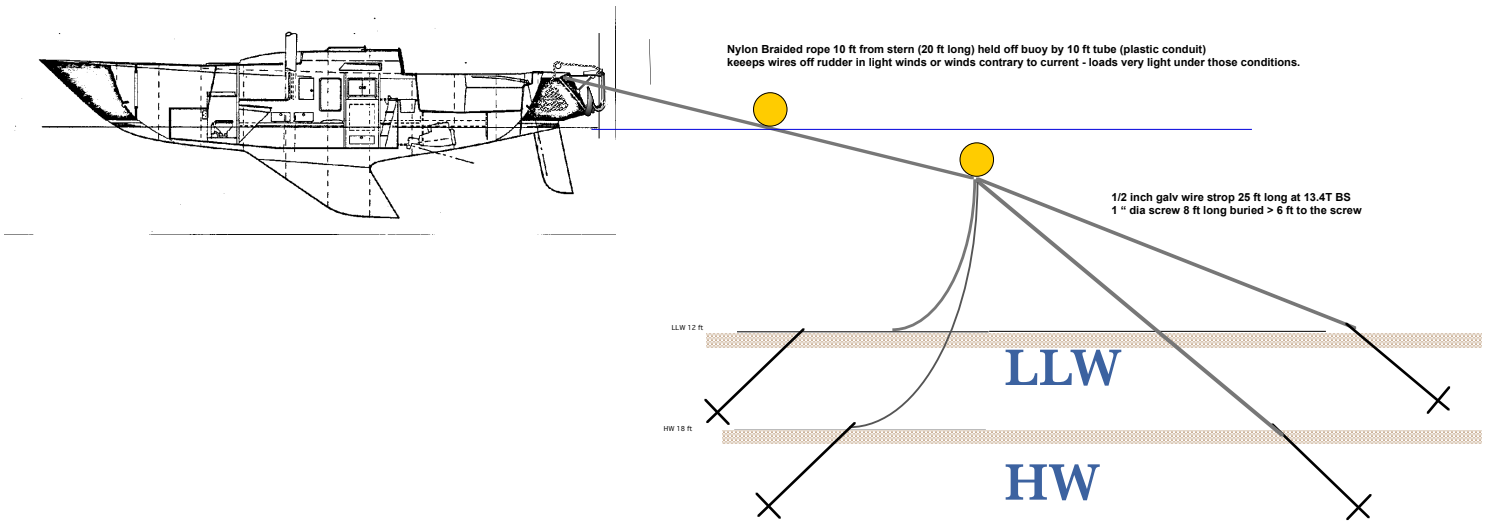

A ten foot screw anchor buried completely can support pulls of several thousand pounds. But it must not be jerked by the rode, or it will work its way free. The screw anchor requires a steady pull along the long axis (i.e the screw should be aligned with the angle of the rode as much as possible) . The rode must also stretch and absorb the loads as the boat rises to the waves. Anchoring off the stern helps because the movement at the stern is less than at the bow. nevertheless if the wave height from crest to valley is, say, five feet, and the rode is taught due to the wind pressure, then the rode must stretch several feet to allow the boat to rise with the wave.

When the diver drove in the last two turns of the screw, he estimated that he was exerting 100 lbs of force at the end of a nine foot bar, or 900 foot-lbs of torque. The manufacturer of the screw estimates a holding power of ten times the torque required to bury the screw. That would give us 9000 lbs of holding power per screw. We buried two screws and shared the load between them. These screws were from the telephone company which uses them to hold up the telephone poles. They are eight feet long galvanized steel with a single welded 12 inch disc. The shaft is 3/4 inch dia.

Corrosion

For long term mooring the corrosion of cheaply made shackles is a problem. The typically Chinese made shackles sold in boating stores have a life of about six months in salt water. By that time the screw threads will have been corroded away so that the pin and shackle are hardly joined.

All nylon rodes - no shackles.

The next anchor system I make will use no shackles. The nylon will be spliced to the anchor permanently, and spliced to the swivel, which then goes to the dacron bridle which is also spliced to the swivel. I will use nylon thimbles to keep the rode off the galvanized swivel and off the anchor because the inevitable rust would deteriorate the nylon rode.

Corrosion after twelve months

This 1/2 inch shackle pin has been reduced to 50% of its original diameter and is loose in the bow. The galvanized wire tie kept the pin from falling out completely.

And here the pin is loose because the retaining s.s. split pin corroded away.

The genuine CQR is almost indestructible.

Types of Anchor

I use CQRs for serious storm anchoring in sand. The windage on my boat requires a holding force of 4000 lbs in a force 4 hurricane (140 kts). Two 35 lb CQRs can provide this holding power if they are helping each other and if they are buried four feet down. Only a hurricane force wind can bury them this deep. You would need to put a pull on the rode of 4000 lbs to bury them to a depth that would sustain a pull of 4000 lbs - only a tug boat could do this. So what happens is that you dig them in so that the anchor has a good grip on the bottom, then wait for the wind to drive it in deeper. If you are stern anchoring the pull by the wind will be directly away from the anchors - a straight line pull. But if you are bow anchored the boat will yaw and will disturb the anchors, perhaps even pull them loose before they have a chance to bury.

Use an anchor type that will bury quickly as the pull comes on the rode. i.e. a "burying type" anchor like the CQR. By the way, if you do experience 140 kt winds don't expect to be able to later retrieve the anchors. Consider it a good sacrifice.